Hillmar
Hillmar Industries Ltd.
7371 Vantage Way
Delta, BC V4G 1C9
P:604 946-7115 F:604 946-0329
info@hillmar.com www.hillmar.com

INDUSTRIAL DBQS-CSB FM
DBQS-CSBFM-3150-120000
SPECIFICATION SHEET
SLS & MKTG
ENGLISH

Sheet Number:	
Job Number:	
Form Number:	829-725-82697PT

Company / Project Reference:	Date.:	Page.:	Document Package No.:	Rev.:
		1 OF 1		

Inventor Drawing

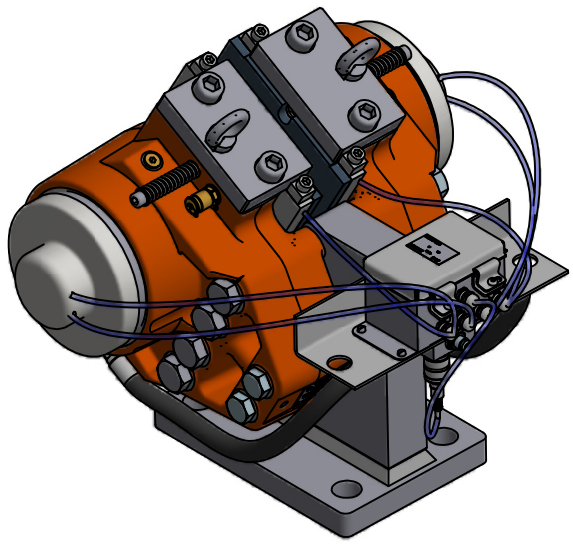

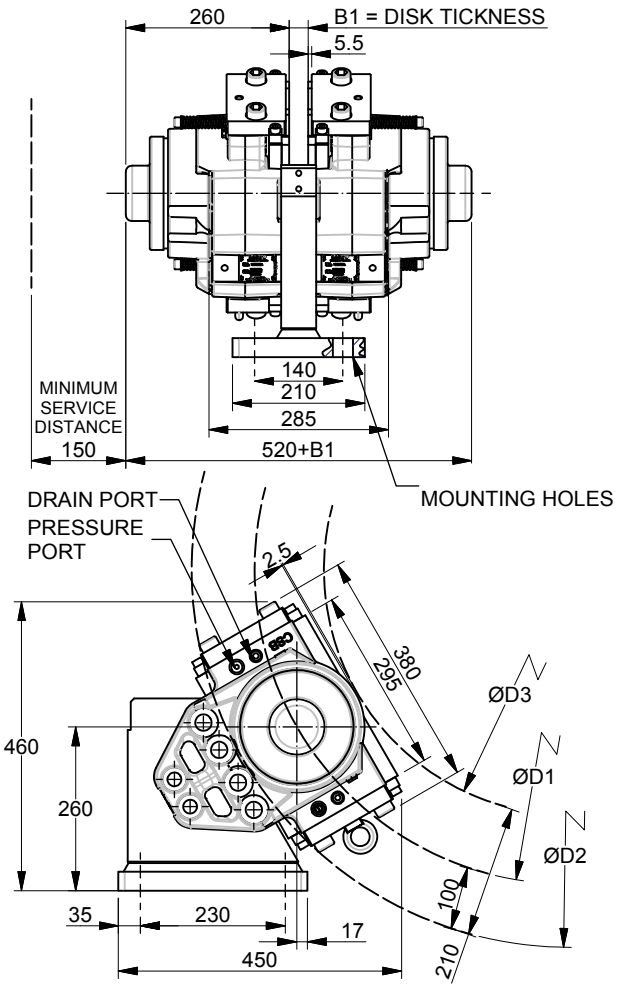

FEATURE	CODE
Industrial disc brake	DBQS
Series	CSB
Brake size	3150
Foot mount	FM
Nominal braking force F_B (N)	120000

Example for ordering	DBQS-CSB-3150-120000

TECHNICAL DATA

Clamping force (N) (F_C)		300000
Braking force static @ μ=0.5 (N) (F_B)		150000
Braking force dynamic @ μ=0.4 (N) (F_B)		120000
Loss of force pre 1mm of pad wear (%)		7.5
Maximum wear of each brake pad (mm)	Sintered	10
	Organic	10
Disc thickness B1 (mm)		20 - 50
Theoretical friction diameter		ØD1
Disc diameter		ØD2
Maximum coupling hub diameter		ØD3
Brake pad width (m)		0.2
Nominal air gap		1 mm / side
Braking torque (Nm)	$M_B=F_B \times (D2-0.2) / 2$	
Operating pressure (bar)		148
Maximum pressure (bar)		164
Oil volume (CC) to release 1mm /half		12.75
Pressure port connection (2 ports)		1/4" BSPP
Temperature range (°C)		-20 to +70
Standard paint PASTEL ORANGE		RAL #2003
Mounting holes(braket)		4 x Ø32
Mounting bolts (CL 10.9)		4 x M30
Bolt tightening torque (Nm)		2100
Weight of brake (2 halves) (kg)		190

NOMINAL SPECIFICATION

Actual torque may vary depending on adjustment of brake and coefficient of friction. Brake supplied standard w ith organic linings.

Bearing and structure loads must be checked due to unbalanced brake loads.

NOTES

All figures are nominal figures only

All dimensions are in millimeters

Document Template #710-101-62058

** ALL TECHNICAL DATA IS SUBJECT TO CHANGE WITHOUT NOTICE **
Hillmar works have a fully registered ISO 9001-2008 quality assurance programme (QCB #01-1525)

C:\TEMP\439ea880-30dd-419c-9f6a-b6d36be69bd5\80000526978\HILLMAR\HILLMAR PRODUCTION\08 INDUSTRIAL DB\0700-8\07008002 DBQS-CSB\SPC-SHT-DBQS-CSB\82697 DBQS-CSBFM-3150-120000.idw